Measurement Sketch

ORDER	SEASON	CLIENT	BRAND
	SS27	n/a	*Build your Brand*
STYLE CODE	**STYLE NAME**	**GENDER**	**SUPPLIER**
BY460	Fluffy Loose Fit Troyer	Male	*72503*



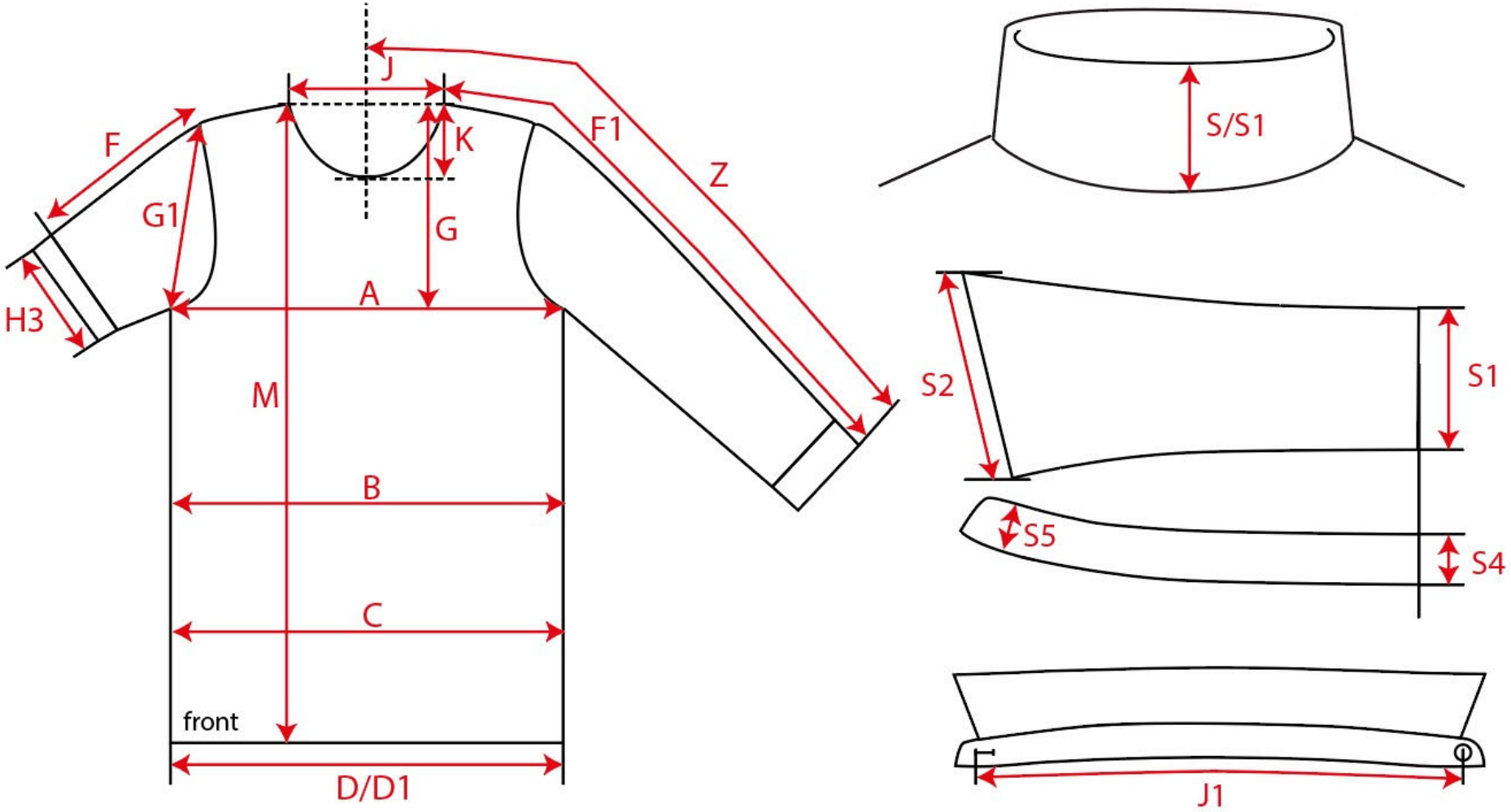

Created	Last change date	Last change name	Status	Page
ABA.tbi - 26.01.2026 09:46:15	*lke.tbi - 22.09.2026 11:09:05*	*lke.tbi*		Page 1 of 2

Style Measurement View for Client

ORDER	SEASON	CLIENT	BRAND
	SS27	n/a	*Build your Brand*
STYLE CODE	**STYLE NAME**	**GENDER**	**SUPPLIER**
BY460	**Fluffy Loose Fit Troyer**	**Male**	***72503***



Basic Measurement Chart | **XS-5XL Men** | **Base Size** | **M**

-	Measurements (values)	XS	S	M	L	XL	XXL	3XL	4XL	5XL	Tol. +/-	Comment
M	front length from HSP	69,0	71,0	73,0	75,0	77,0	79,0	80,0	81,0	82,0	1,0	as sample
A	1/2 chest width	56,0	59,0	62,0	65,0	68,0	71,0	75,5	80,0	84,5	2,0	