Measurement Sketch

ORDER	SEASON	CLIENT	BRAND
	SS27	n/a	*New Morning Studios*
STYLE CODE	**STYLE NAME**	**GENDER**	**SUPPLIER**
NM016	Sleeveless Tee	Male	*73286*

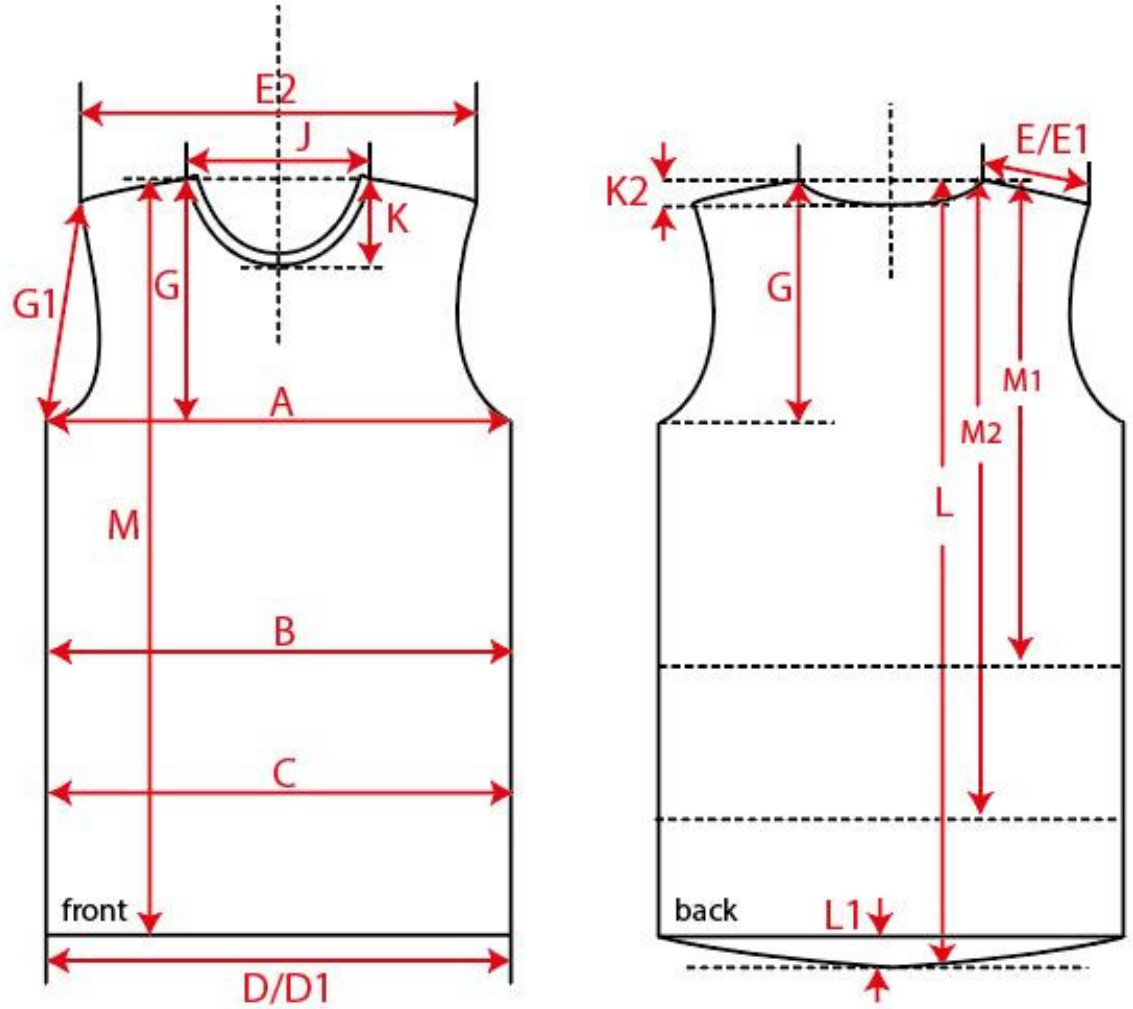

Created	Last change date	Last change name	Status	Page
ABA.tbi - 09.02.2026 13:55:48	*lke.tbi - 22.09.2026 11:33:51*	*lke.tbi*		Page 1 of 2

Style Measurement View for Client

NEW MORNING STUDIOS



ORDER	SEASON	CLIENT	BRAND
	SS27	n/a	*New Morning Studios*
STYLE CODE	**STYLE NAME**	**GENDER**	**SUPPLIER**
NM016	Sleeveless Tee	Male	*73286*

Basic Measurement Chart | **XS-5XL Men** | **Base Size** | **M**

-	Measurements (values)	XS	S	M	L	XL	XXL	3XL	4XL	5XL	Tol. +/-	Comment
M	front length from HSP	72,0	74,0	76,0	78,0	80,0	82,0	83,0	84,0	85,0	1,0	
A	1/2 chest width	48,0	51,0	54,0	57,0	60,0	63,0	67,5	72,0	76,5	2,0	