Measurement Sketch

ORDER	SEASON	CLIENT	BRAND
	SS26	n/a	*New Morning Studios*
STYLE CODE	**STYLE NAME**	**GENDER**	**SUPPLIER**
NM017	Ladies Basic Tank Top	Female	*73286*

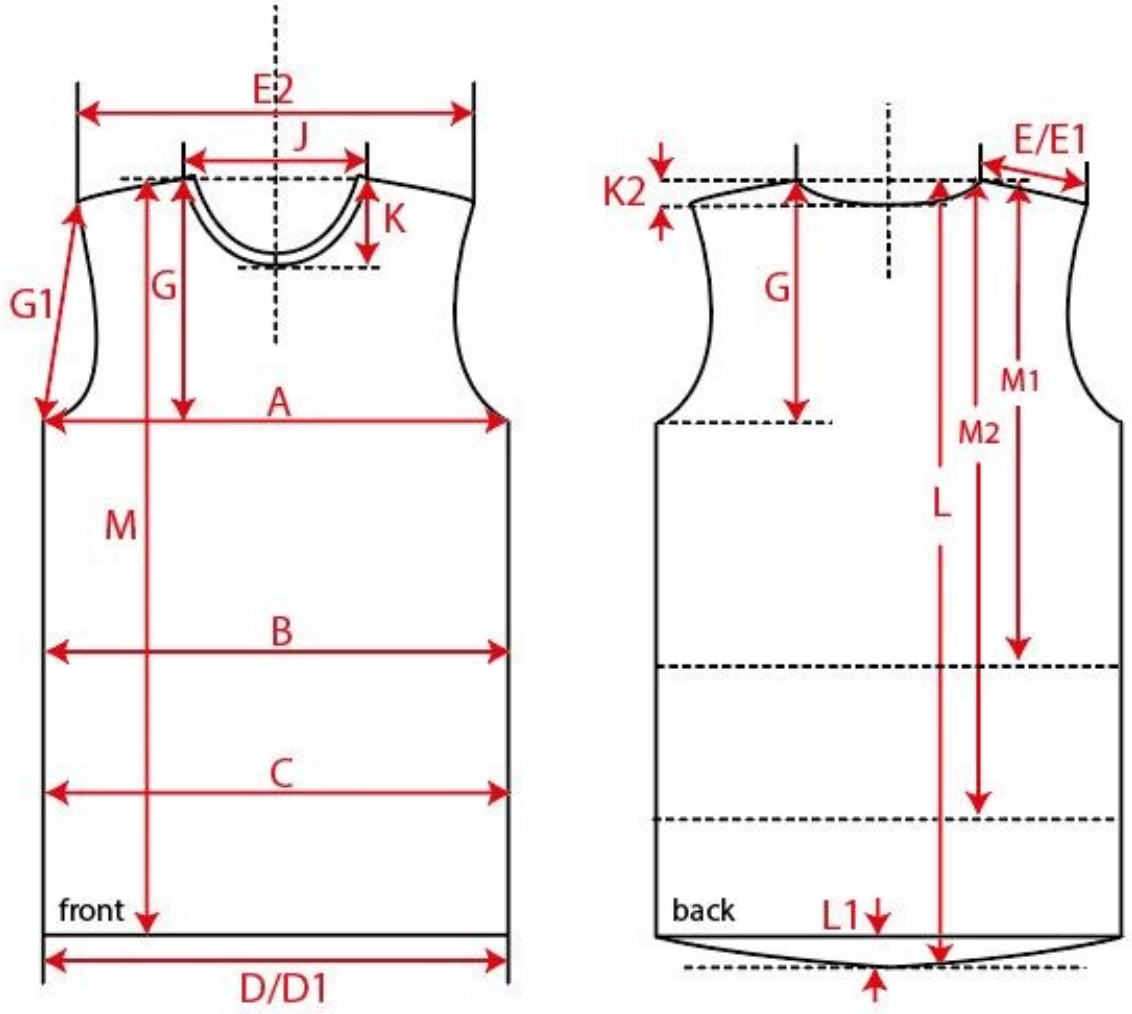

Created	Last change date	Last change name	Status	Page
ABA.tbi - 31.01.2025 15:25:16	*03.07.2025 09:34:05*	*mp.tbi*		Page 1 of 2

Style Measurement View for Client

ORDER	SEASON	CLIENT	BRAND
	SS26	n/a	*New Morning Studios*
STYLE CODE	**STYLE NAME**	**GENDER**	**SUPPLIER**
NM017	Ladies Basic Tank Top	Female	*73286*



Basic Measurement Chart | **XS-5XL Ladies** | **Base Size** **S**

-	Measurements (values)	XS	S	M	L	XL	XXL	3XL	4XL	5XL	Tol. +/-	Comment
M	front length from HSP	52,0	54,0	56,0	58,0	60,0	65,0	66,0	67,0	68,0		
A	1/2 chest width	31,5	34,0	36,5	39,0	41,5	45,5	49,5	53,5	57,5		
D	1/2 hem width	25,5	28,0	30,5	33,0	35,5	39,5	43,5	47,5	51,5		
J	neck width	18,4	19,0	19,6	20,2	20,8	21,7	22,6	23,5	24,4		